ORDER NO.	WOODHEAD NO.	COLOR
130147-0175	69W76	YELLOW

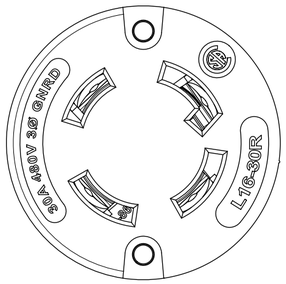

FACE VIEW

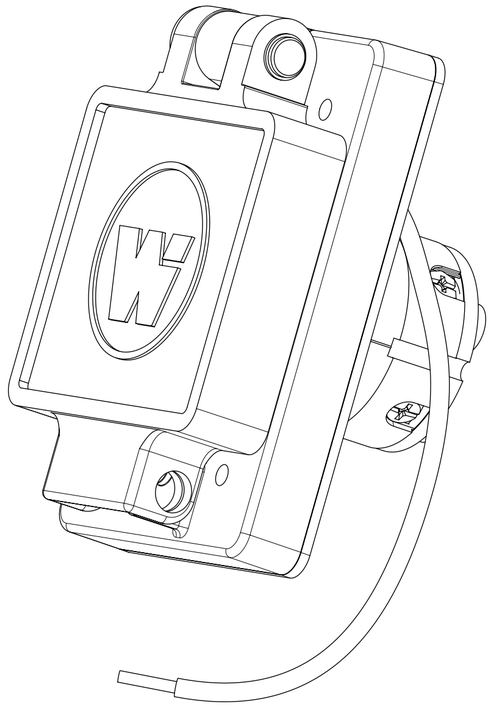

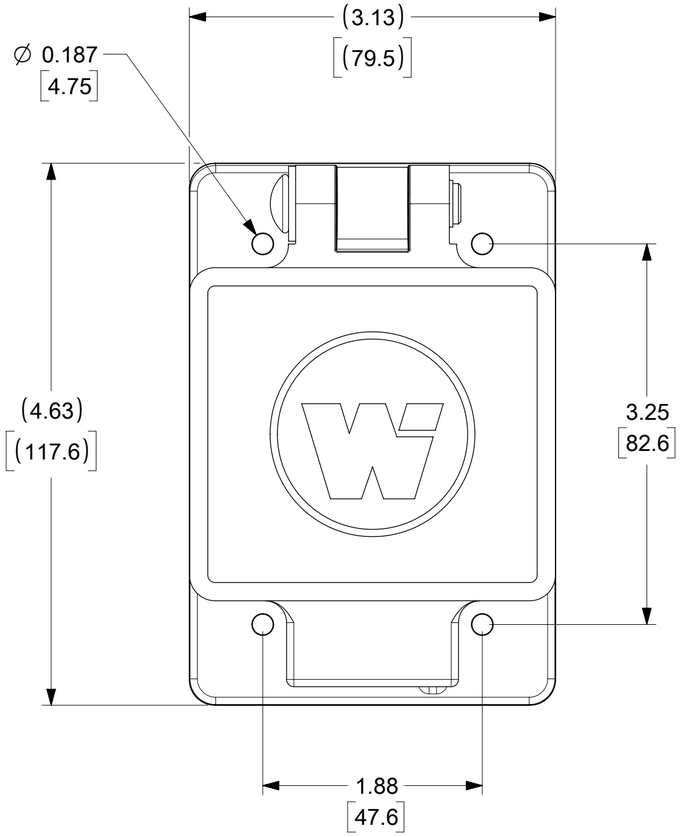

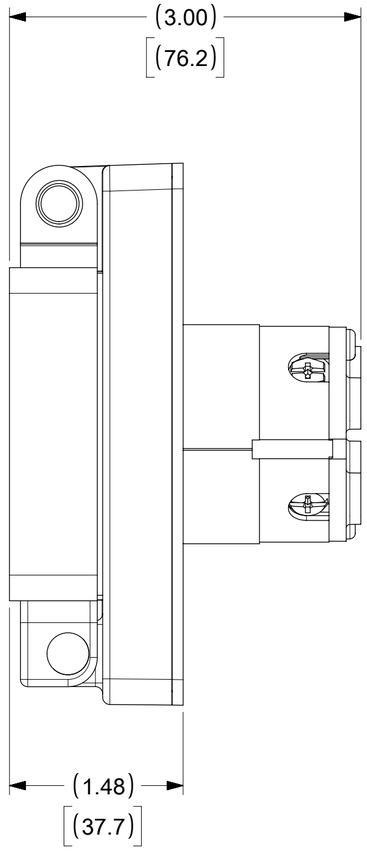

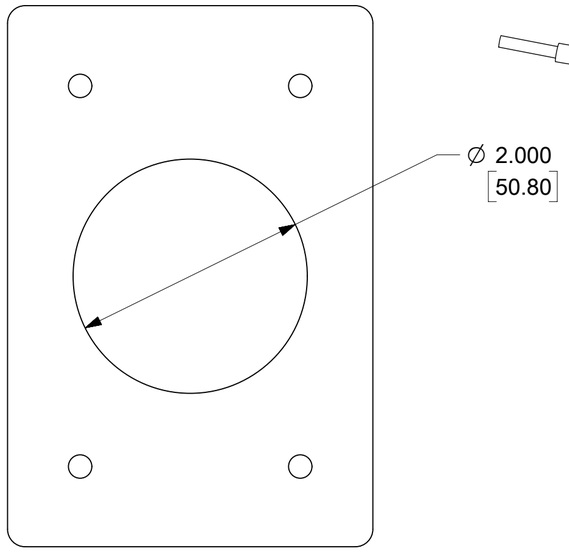

CLEARENCE HOLE
(FOR PANEL MOUNT)

DESCRPITION	MATERIAL	QTY.
BLADES	BRASS, NICKEL PLATED	3
RETAINING SCREWS	STAINLESS STEEL	3
CLAMP AND TERMINAL SCREW ASSY.	BRASS, ZINC PLATED	3
FEMALE INSERT	NYLON	1
TERMINAL COVER	POLYCARBONATE	1
COVER ASSEMBLY	POLYCARBONATE, STAINLESS STEEL, ALUMINUM	1
GASKET FLIP	NEOPRENE	1
SUPPORT PLATE	STAINLESS STEEL	1
SCREW (GROUND WIRE)	STAINLESS STEEL	1
JUMPER WIRE ASSY	COPPER, BRASS (TINNED FINISH)	1

DOCUMENT STATUS	P1	RELEASE DATE	2019/03/22 18:14:53

SYMBOLS: FA = 0; FC = 0; FE = 0; S = 0; ▼ = 0; C = 0; ☒ = 0; ■ = 0; G = 0

THIS DRAWING CONTAINS INFORMATION THAT IS PROPRIETARY TO MOLEX ELECTRONIC TECHNOLOGIES, LLC AND SHOULD NOT BE USED WITHOUT WRITTEN PERMISSION

DIMENSION UNITS: INCH[MM] | SCALE: NTS

GENERAL TOLERANCES (UNLESS SPECIFIED)

	MM	INCH
4 PLACES	±	±
3 PLACES	±	±
2 PLACES	±	±
1 PLACE	±	±
0 PLACES	±	±
ANGULAR TOL	± °	

DRAFT WHERE APPLICABLE MUST REMAIN WITHIN DIMENSIONS

CURRENT REV DESC: MIGRATE TO ECTR/NX

EC NO: 613948
DRWN: SRPATIL 2018/12/26
CHK'D: DNGUYEN62 2019/03/19
APPR: HKNEELAND 2019/03/22

INITIAL REVISION:
DRWN: SRPATIL 2018/12/26
APPR: HKNEELAND 2019/03/22

THIRD ANGLE PROJECTION | DRAWING: C-SIZE | SERIES: 130147

molex

WATERTITE FS COVERPLATE 3P4W L16-30

PRODUCT CUSTOMER DRAWING

DOCUMENT NUMBER	DOC TYPE	DOC PART	REVISION
1301470175	PSD	000	A

MATERIAL NUMBER	CUSTOMER	SHEET NUMBER
SEE TABLE	GENERAL MARKET	1 OF 1

FORMAT: Eng-tega-master-tb-prod-C
REVISION: D
DATE: 2018/01/18