Dimensões em polegada
Dimensions in inches

THIS IS AN UPDATED REVISION, THE PREVIOUS ONE MUST BE DISREGARDED.

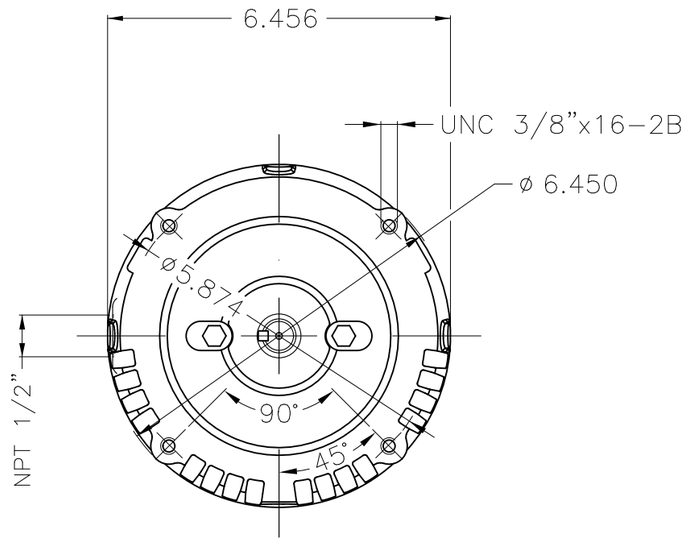


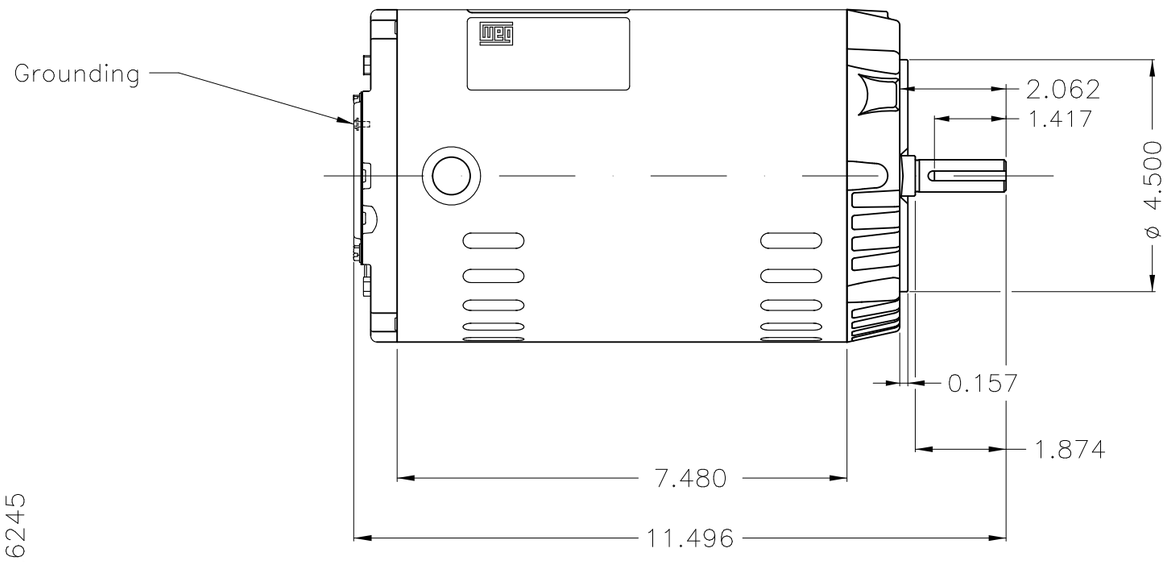


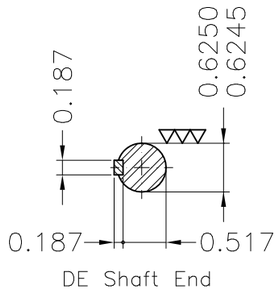


Without coating
Mounting F-1/B14R(D)

| ECM | LOC | SUMMARY OF MODIFICATIONS | EXECUTED | CHECKED | RELEASED | DATE | VER |
|---|---|---|---|---|---|---|---|
| | | | | | | | |
| | | | | | | | |

| | | | |
|---|---|---|---|
| EXECUTED | USERADMIN | THREE PHASE ODP ROLLED STEEL PREM. EFF. | |
| CHECKED | | FRAME 56C ODP | |
| RELEASED | | WEG code: 12809661 | |
| REL DT | 23.01.2018 | WMO | Jaragua do Sul Product Engineering |

SHEET 1 / 1

1 HP 04 Poles 60Hz

A

ZME A3

WEG's property. Forbidden reproduction without previous authorization.