ProSite Floodlight for CID2/CIID2/CIII

Important Information

These instructions contain safety information, read and follow them carefully. Dialight will not accept any responsibility for injury, damage or loss which may occur due to incorrect installation, operation or maintenance.

Installation/Operation Instructions

Language	Page Number
English	3

Note: Save these instructions for future use.

Dialight, 1501 Route 34 South, Farmingdale, NJ, USA 07727
Tel: +1 732 919 3119 Fax: +1 732 751 5778 www.dialight.com

WARNING: INSTALLATION & SECONDARY RETENTION.
The use of this product without proper installation and inspections, including secondary safety retention/securing/netting, could cause severe injury or death.

Dialight recommends that all installations should use secondary retention and/or safety netting (appropriate to the installation environment) where applicable. It is the exclusive responsibility of the contractor, installer and/or end customer to: (a) determine the suitability of the product for its intended application; and, (b) ensure that the product is installed safely (with secondary retention and/or safety netting where appropriate) and in compliance with all applicable laws and regulations. To the extent permissible under the relevant law, Dialight disclaims all responsibility for personal injury and/or other damage resulting from any dislodgement or other dislocation of this product.

ADVERTENCIA: INSTALACIÓN Y SISTEMA SECUNDARIO DE SUJECIÓN.
Usar este producto sin haberlo instalado e inspeccionado correctamente, lo que incluye usar sistemas secundarios de retención/sujeción/redes, podría ocasionar lesiones graves o la muerte.

Dialight recomienda que en todas las instalaciones se utilice un sistema secundario de retención o una red de seguridad (apropiados para el lugar de la instalación), según corresponda. Será responsabilidad exclusiva del contratista, el instalador o el cliente final encargarse de lo siguiente: a) determinar si el producto es apto para el uso previsto; y b) asegurarse de que el producto se instale de manera segura (usando un sistema secundario de retención o una red de seguridad, si corresponde) y de conformidad con todas las leyes y disposiciones aplicables. En la máxima medida autorizada por la legislación pertinente, Dialight no será responsable por ninguna lesión personal u otros daños que se produzcan a raíz de cualquier caída o desplazamiento de este producto.

WARNUNG: INSTALLATION UND ZWEITE ABHÄNGUNG.
Die Verwendung dieses Produkts ohne ordnungsgemäße Installation und Inspektionen, einschließlich einer zweiten Abhängung/eines Sicherheitsnetzes, könnte zu schweren Verletzungen oder Tod führen.

Dialight empfiehlt bei allen Installationen die Verwendung einer zweiten Abhängung und/oder eines Sicherheitsnetzes (entsprechend der Installationsumgebung). Es ist die ausschließliche Verantwortlichkeit des Vertragsnehmers, Monteurs und/oder Endkunden: (a) die Eignung des Produkts für seinen vorgesehenen Nutzungszweck zu bestimmen und (b) sicherzustellen, dass das Produkt sicher (mit ggf. zweiter Abhängung und/oder einem Sicherheitsnetz) und gemäß allen geltenden Gesetzen und Vorschriften montiert wird. Soweit gemäß dem geltenden Gesetz erlaubt, schließt Dialight jegliche Haftung für Körperverletzung und/oder andere Schäden aufgrund einer Entfernung oder anderen Positionsänderung dieses Produkts aus.

AVERTISSEMENT : INSTALLATION ET FIXATION SECONDAIRE.
L'utilisation de ce produit sans une installation et des inspections en bonne et due forme, notamment la sécurisation/ la fixation de sécurité secondaires/ l'installation d'une grille en acier tissée de sécurité, peut entraîner des blessures graves voire la mort.

Dialight recommande que toutes les installations soient pourvues d'une fixation secondaire ou d'une grille en acier tissée de sécurité (adaptées à l'environnement de l'installation) dans la mesure du possible. Il va de la responsabilité exclusive de l'entrepreneur, de l'installateur ou du client final de : (a) déterminer si le produit est adapté à son usage prévu et (b) assurer que le produit est installé de manière sûre (avec une fixation secondaire et/ou une grille en acier tissée de sécurité le cas échéant) et en conformité avec la loi et les normes en vigueur. Dans la mesure permise par la loi en vigueur, Dialight n'assumera aucune responsabilité en cas de blessure sur la personne ou autre dommage résultant du déboîtement ou de toute autre dislocation de ce produit.

AVISO: INSTALAÇÃO E RETENÇÃO SECUNDÁRIA.
O uso deste produto sem a instalação e inspeções adequadas, incluindo retenção/fixação secundárias e/ou redes de segurança, pode provocar ferimentos sérios ou morte.

A Dialight recomenda que todas as instalações utilizem retenção secundária e/ou redes de segurança (apropriadas ao ambiente da instalação) sempre que aplicável. É responsabilidade exclusiva da empreiteira, instaladora e/ou do cliente final: (a) determinar a adequabilidade deste produto para a aplicação pretendida; e, (b) assegurar que o produto seja instalado de maneira segura (com retenção secundária e/ou rede de segurança sempre que apropriado) e em conformidade com todas as leis e regulamentações aplicáveis. Dentro dos limites permitidos pela legislação pertinente, a Dialight se exime de toda responsabilidade por ferimentos pessoais e/ou outros danos resultantes do desalojamento ou de outro deslocamento deste produto.

Dialight, 1501 Route 34 South, Farmingdale, NJ, USA 07727
Tel: +1 732 919 3119 Fax: +1 732 751 5778 www.dialight.com

English

WARNING:
To avoid the risk of fire, explosion, or electric shock, this product should be installed, inspected, and maintained by a qualified electrician in accordance with all applicable electrical rules and regulations.

Safety Instruction:
To avoid electric shock:

- Be certain electrical power is OFF before and during installation and maintenance.
- Make sure the supply voltage is the same as the rated luminaire voltage.
- The technical data indicated on the LED luminaires are to be observed.
- Changes of the design and modifications to the LED luminaire are not permitted.
- Observe the national/regional electrical safety rules and regulations during installation.
- The LEDs of this luminaire are not replaceable; when the LEDs reach their end of life, the whole luminaire shall be replaced.

NOTE: Watertight fittings are required to be used on this luminaire.

Equipment Application
This product can be used inside or outside to illuminate areas in an industrial location.

WARNING: Please ensure the application structure can handle the weight of the luminaire. Dialight is not responsible for any damages to the application structure or the luminaire when mounted improperly.

Installation
Ensure that the mains voltage supply is disconnected before connecting the luminaire. Install the equipment in accordance with the manufacturer's instructions as well as any other applicable electric codes.

Always transport and store the equipment in its original packaging and keep in a dry location. When unpacking check for any cracks or damage in the housing or lens. If in doubt, do not install.

When assembling the cable entries for the mains connection, always observe the manufacturer's specifications for the glands used. Unused cable entries must be closed and sealed by a certified blanking plug.

Technical Data:
Locations:
F*D****(D/J)***** IP-66/67 & NEMA 4X

Notice for UL 844 Models:
Outside Type (Salt Water)
Suitable for Wet Locations
Convient aux Emplacements Mouillés

Class I, Div 2, Groups A, B, C, D
Class I, Zone 2, Group IIC
Class II, Div 2, Groups F, G
Zone 22
Class III
T-Code: -40°C to +65°C (T4)
-40°C to +55°C (T4A)

Temperature Range:
F1D****(B/C/E/F)******
F2D****(F/H/L)******
-40°C to +65°C [-25°F to +149°F]
F2D****(E/N)******
-40°C to +55°C [-25°F to +131°F]

Rated Input Voltage:
F*D***(2/8)*******
120-277 VAC 50/60 Hz or 120-250 VDC
F*D***(5/9)*******
347-480 VAC 50/60 Hz

Weight:

F1D**********	29.9 lbs [13.6 kg]
F2D**********	54.1 lbs [24.5 kg]

Impact Rating:

F*D4**********	IK-10
F*D7**********	IK-08

Cable Entries: 2x 3/4 -14 NPT
(Not used on Slip Fitter models)

Dimensions: See Technical Diagrams

NOTE: The addition of cable glands, dust caps, electrical plugs, or occupancy sensors may change the IP rating of this luminaire.

WARNING: Do not over tighten as the protection rating may be compromised. Always refer to the gland manufacturer's data for torque settings.

Mounting the Luminaire
This product can be mounted via bracket or slip fitter. All mounting options offer 7.5 degrees of adjustment with angle indication labels present.

Bracket Models: F*D****(E/F)****
There are 2 bracket models, Angled and Straight. See the Technical Diagrams section for the mounting patterns.

Technical Data:
Power Consumption:

F1D***(2/8)B******	81 W
F1D***(2/8)C******	124 W
F1D***(2/8)E******	175 W
F1D***(2/8)F******	234 W
F2D***(2/8)F******	200 W
F2D***(2/8)H******	234 W
F2D***(2/8)L******	346 W
F2D***(2/8)N******	484 W
F1D***(5/9)B******	84 W
F1D***(5/9)C******	128 W
F1D***(5/9)E******	179 W
F1D***(5/9)F******	237 W
F2D***(5/9)F******	206 W
F2D***(5/9)H******	241 W
F2D***(5/9)L******	357 W
F2D***(5/9)N******	499 W

Once mounted, the angle of the luminaire can be adjusted by loosening the M8 Hex Bolt on each side of the bracket. When loosening, do not back bolt out more than 5 full rotations.

When the desired angle has been achieved, the bolts can be tighten to lock in the angle. Torque: 15 ft-lbs [20.3 N-m]

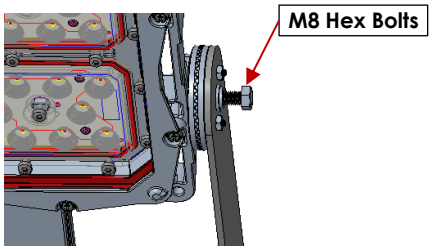

WARNING: Do not loosen the Hex Nuts on the bracket.

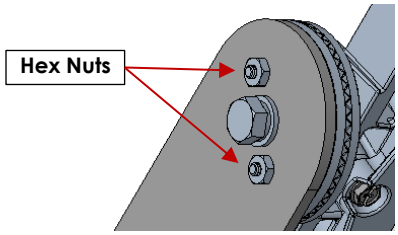

Dialight, 1501 Route 34 South, Farmingdale, NJ, USA 07727
Tel: +1 732 919 3119 Fax: +1 732 751 5778 www.dialight.com

Slip Fitter Models: F1D****S****

All assembly pieces should be packed into the box for installation. The slip fitter is designed to be mounted over a 2" [51mm] pole or 2.38" [60.5mm] max O.D. tenon.

1. Slide the hazardous pole base onto application pole and feed source wire conductor through the opening of the pole base.

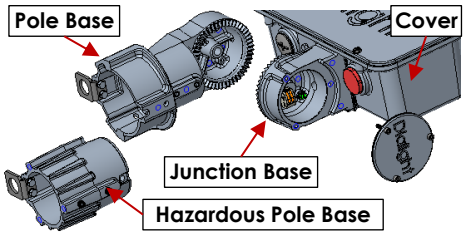

2. Slightly tighten the set screws of the pole base but do not torque yet.

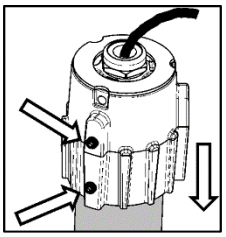

3. Ensure there is at least 6 in. [15.24cm] of source wire conductor beyond the cord grip and tighten the cord grip.
Torque: 5 ft-lbs [6.8 N-m]

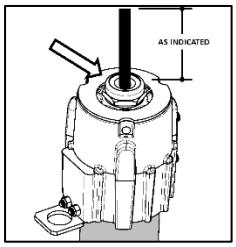

4. Ensure that cord grip has sealed around outer jacket of source wire. A slight tug on the source wire will indicate if the cord grip has gripped the source wire.

5. Feed the source wire conductor through the opening of the pole base and slide the pole base onto the mounted hazardous pole base (on the application pole).

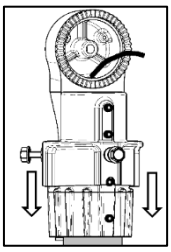

6. Tighten the 3x 5/16 side bolts of the top base into the mounted pole base.
Torque: 5 ft-lbs [6.8 N-m]

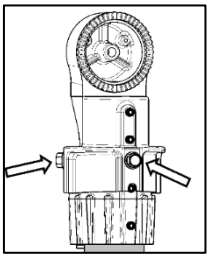

7. Feed the source wire conductors into the junction base mounted on the luminaire and engage the junction base with the mounted pole base.

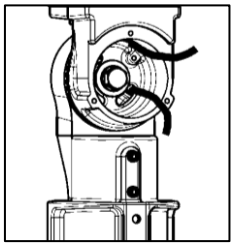

8. Engage the captive pivot 7/16 hex bolt of the junction base into the pole base to secure the luminaire, but do not yet torque as to still allow the luminaire to tilt for light pattern aiming.

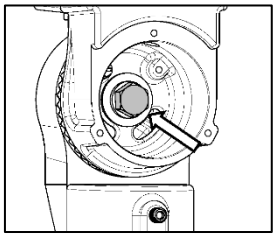

9. Tilt and turn the luminaire to desired position on the application pole to illuminate the desired area.

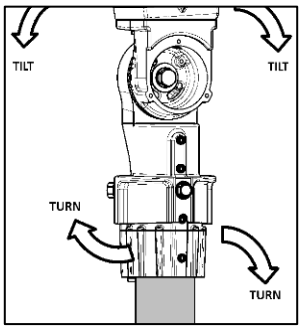

10. Once the luminaire is at the desired position, tighten the pivot hex bolt.
Torque: 11 ft-lbs [14.9 N-m]

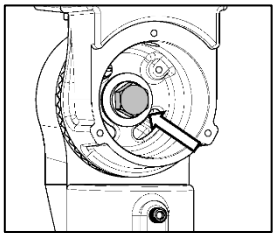

11. Tighten the set screws of the hazardous pole base to secure position on the application pole.
Thread locker is recommended.
Torque: 5 ft-lbs [6.8 N-m]

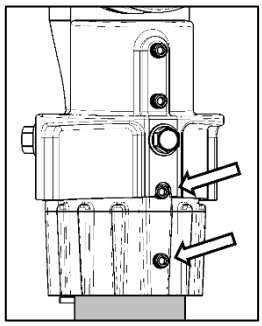

Opening/Closing the Luminaire

This luminaire has 2 lids, a driver enclosure lid and front access lid. Both lids are retained by captive bolts and offer a combination head style for ease of entry. The front access lid is used for wiring the luminaire for bracket models while slip fitter models do not use the front access lid.

Bracket Models: F*D****(E/F)****

Loosen the 4x screws and remove the lid to gain access to the terminal blocks for wiring. When wiring is complete, reattach the lid, and tighten screws back down.
Torque: 30 in-lbs [3.4 N-m]

Dialight, 1501 Route 34 South, Farmingdale, NJ, USA 07727
Tel: +1 732 919 3119 Fax: +1 732 751 5778 www.dialight.com

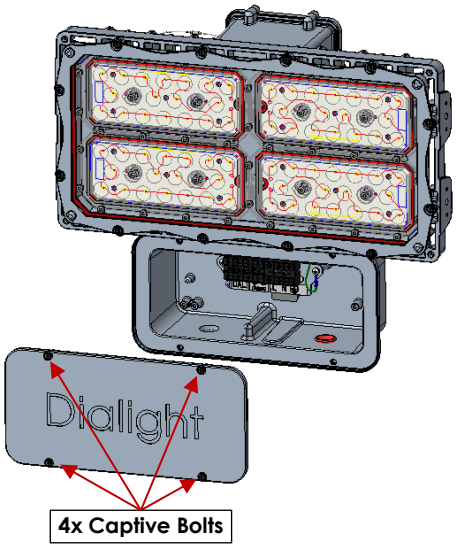

NOTE: The lid is secured to the wiring box via a lanyard; eliminating risk of dropping the lid upon removal.

NOTE: The lid of the luminaire should be oriented as shown above. The Dialight logo should be aligned with the mounting bracket.

Slip Fitter Models: F1D****S****

Make proper connections inside the junction base of the slip fitter and tuck any excess wiring into the junction base. Assure none of the wiring can be pinched when replacing cover.

Install the cover and tighten the hardware using the recommended torque to assure a proper seal.
Torque: 1 in-lb [1.4 N-m]

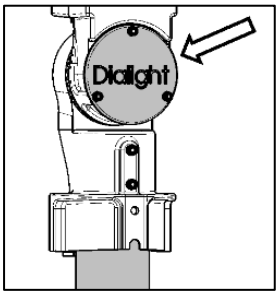

Electrical Connections

Bracket Models: F*D****(E/F)****

The terminal block is suitable for multi-stranded or single core wires. The parameters can be found in Technical Data.

Push Down Terminal Models: F*D******V****

Push down at the 'cross point', insert wire, and release.

Conductor Range	Strip Length
0.5-4 mm² [20-12 AWG]	9 mm [0.35 in.]

Screw Down Terminal Models: F*D******U****

For input power terminal block, loosen terminal screw, insert wire, and tighten screw.

Conductor Range	Strip Length
0.5-6 mm² [20-10 AWG]	10 mm [0.39 in.]

For dimming & Dali lines, push down at the 'cross point', insert wire, and release.

Conductor Range	Strip Length
0.5-4 mm² [20-12 AWG]	9 mm [0.35 in.]

Slip Fitter Models: F1D****S****

All slip fitter models contain lever nut connectors inside the junction base to make appropriate connections.

Conductor Range	Strip Length
0.5-4 mm² [20-12 AWG]	9 mm [0.35 in.]

Single Phase Connections

The connections are marked on the terminal block or on a label and are presented in the table below.

SYMBOL	COLOR	CONNECTION
120-277VAC		
⏚	GREEN/ YELLOW	EARTH/ GROUND
N	WHITE	NEUTRAL
L	BLACK	LIVE
120-250VDC		
⏚	GREEN/ YELLOW	EARTH/ GROUND
N	WHITE	-
L	BLACK	+
347-480VAC		
⏚	GREEN/ YELLOW	EARTH/ GROUND
L2	RED	LIVE 2
L1	BLACK	LIVE 1
CONTROLS		
DIM +	VIOLET	DIMMING +
DIM -	GREY	DIMMING -
DALI	ORANGE OR YELLOW	DALI

0-10 VDC Dimming (If Applicable)

Dimming is controlled by means of a 0-10 VDC signal (to be provided by the installer) to control the level of dimming. At 10 volts, the output of the unit is 100%; at 0 volts, the output will shut off. The DC dimming voltage should not exceed 15 VDC. Increasing the voltage from 10 VDC to 15 VDC will not result in additional light output.

WARNING: Never connect the dimming wires to the Hot or Neutral supply wires.

Variable Voltage Control

An analog 0-10 V active dimmer may be connected to the two wires to control the light output of the fixture. Multiple lights may be connected to the same dimmer, as long as the maximum current rating of the dimmer is not exceeded.

See table for current sinking capabilities of the dimmer. Light output will vary approximately linearly with control voltage, with 10 V corresponding to 100% light output.

Part Number	Current
F1D**********	0.5 mA
F2D****(F/H)******	0.5 mA
F2D****(L/N)******	1.0 mA

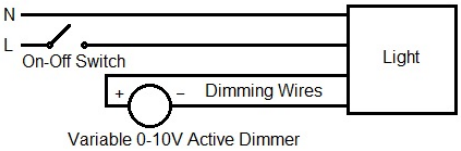

NOTE: Simply shorting the two wires together will cause the light to shut off.

WARNING: Improper installation, operation, or maintenance of this luminaire may result in the invalidation of the warranty, certificate, or declaration of conformity.

DALI Control (If Applicable)

DALI is used to control/schedule and group the luminaire. A DALI controller is to be provided by the installer. The luminaire will not provide a bus signal. A Bus power supply should be used to provide a Bus signal according to the DALI standard.

WARNING: Never connect the DALI wires to the Hot/Live or Neutral supply wires.

WARNING: Do not connect the DALI wires to the dimming wires.

For luminaires containing one power supply [F1D********* & F2D****(F/H)******], only one DALI address will be assigned by the DALI controller.

For luminaires containing two power supplies [F2D****(L/N)******], two DALI addresses will be assigned by the DALI controller.

Dialight, 1501 Route 34 South, Farmingdale, NJ, USA 07727
Tel: +1 732 919 3119 Fax: +1 732 751 5778 www.dialight.com

NOTE: The DALI circuit in two power supply luminaires are already internally wired as a daisy chain to allow for commissioning and discovery. The Bus wire needs to be connected to the DALI terminal block positions in the wiring compartment.

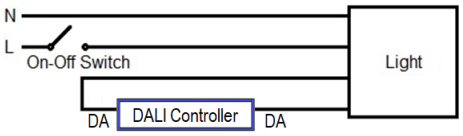

NOTE: Make sure luminaires containing two power supplies are grouped and scheduled together for the luminaire to function in the correct manner.

WARNING: Improper installation, operation, or maintenance of this luminaire may result in the invalidation of the warranty, certificate, or declaration of conformity.

Maintenance / Inspection

This LED luminaire should require a minimum amount of maintenance. If any unforeseen repairs are required, please contact Dialight or its authorized representative.

Within the scope of maintenance or inspection routine the following should be included:

- Protective hoses should be covering the connection cables.
- Cable entries must be free of corrosion.
- The lens should be cleaned periodically as needed to ensure continued photometric performance. Clean the lens with a damp, non-abrasive, lint free cloth. If not sufficient, use mild soap or a liquid cleaner.
- Inspect the luminaire to ensure that it is free of any obstructions or contamination (i.e. excessive dust build up). Clean with a non-abrasive cloth if needed.
- Perform visual mechanical and electrical inspections on a regular basis. We recommend routine checks to be made on a yearly basis. Frequency of use and environment should determine this.

It is recommended to follow an Electrical Preventive Maintenance Program as described in NFPA 70B: Recommended Practice for Electrical Equipment.

Repairs / Overhaul / Modification

The equipment must be operated according to the intended purpose in a perfect and undamaged condition.

NOTE: Should the luminaire enclosure be damaged, only a full luminaire replacement will be permitted. In case of doubt, the equipment should be returned to Dialight for inspection/repair.

Disposal & Recycling

When the apparatus is disposed of, the respective national regulations on waste disposal should be observed.

Secondary Retention Cable

Part Number	Description
H6XCAB60	Secondary Retention Cable, Stainless Steel, 60"
H6XCAB72	Secondary Retention Cable, Stainless Steel, 72"

1. Read and follow all instructions in the installation manual provided with the secondary retention cable.
2. Connect the safety cable to one of the retention brackets on the luminaire.
3. When using a safety cable for secondary retention, ensure minimum slack in the cable installation. The slack should be no greater than 1 ft. [0.3 m]

NOTE: Cable type, size, material, and attachment method to meet customer application and to be appropriate with all local and regional regulations.

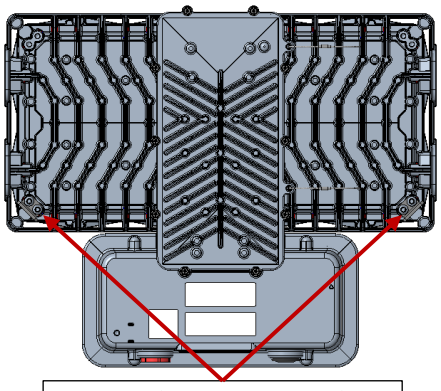

F1 Retention Bracket Locations

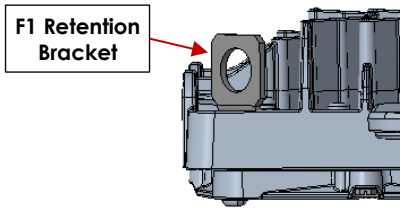

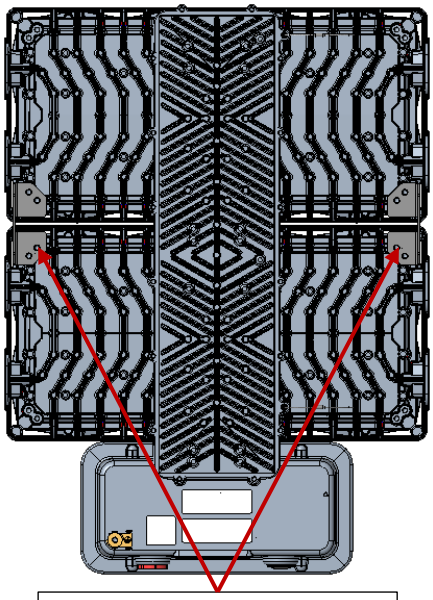

F2 Retention Bracket Locations

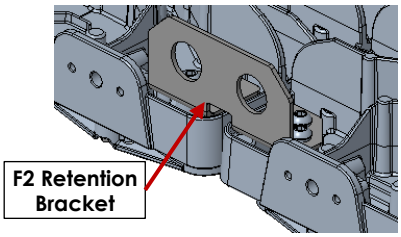

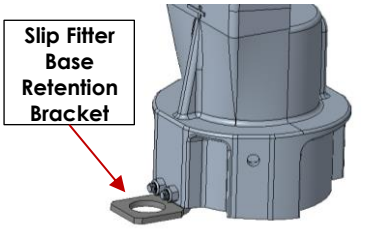

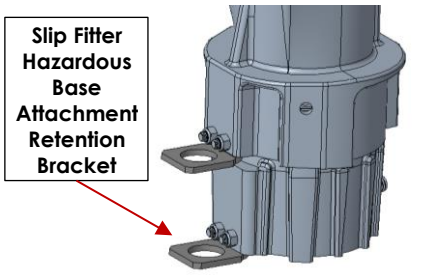

Dialight, 1501 Route 34 South, Farmingdale, NJ, USA 07727
Tel: +1 732 919 3119 Fax: +1 732 751 5778 www.dialight.com

Technical Diagrams
Dimensions: in [mm]

F1 ANGLED BRACKET

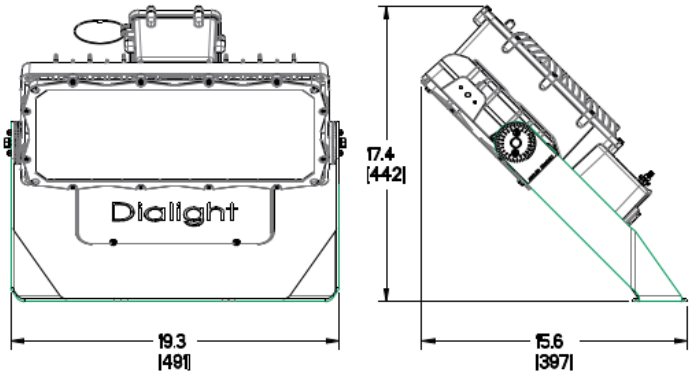

F1 STRAIGHT BRACKET

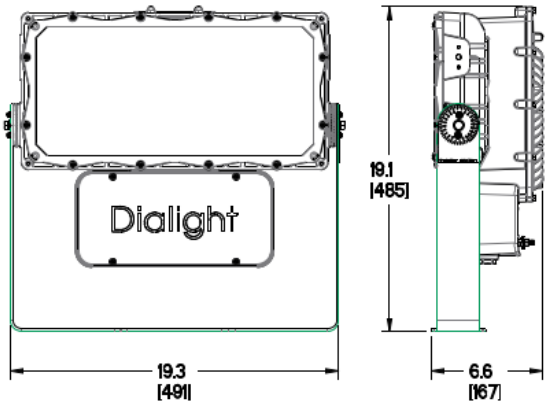

F1 BRACKET MOUNTING PATTERN

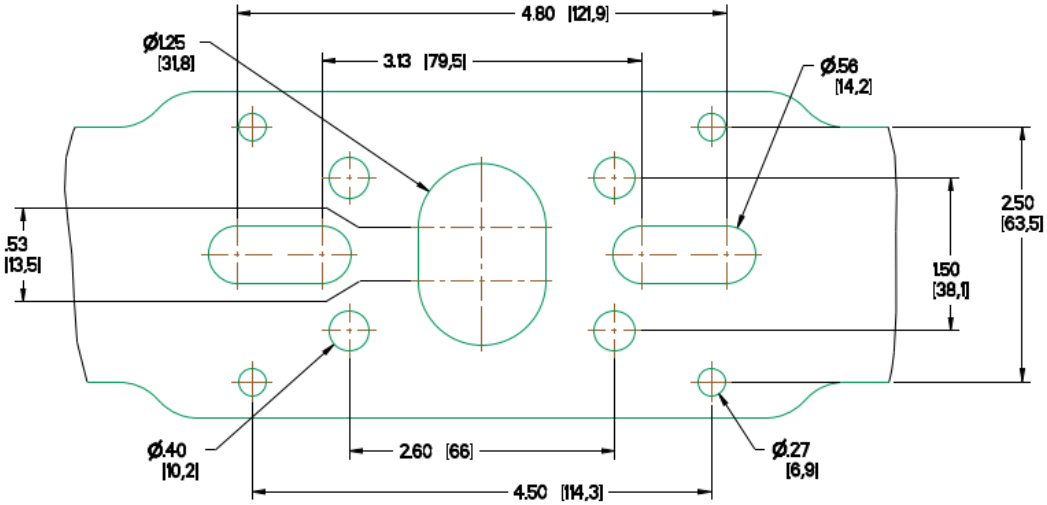

F1 SLIP FITTER - UL 844

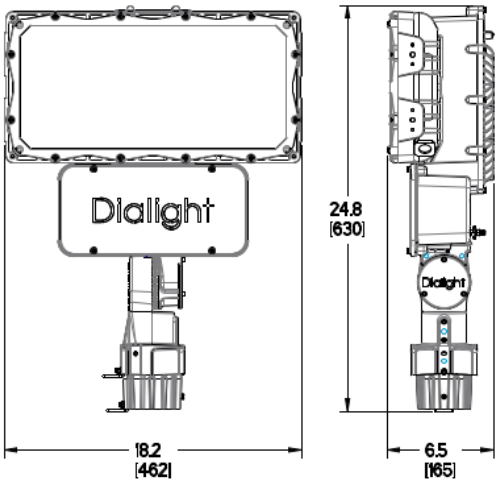

Dialight, 1501 Route 34 South, Farmingdale, NJ, USA 07727
Tel: +1 732 919 3119 Fax: +1 732 751 5778 www.dialight.com

F2 ANGLED BRACKET

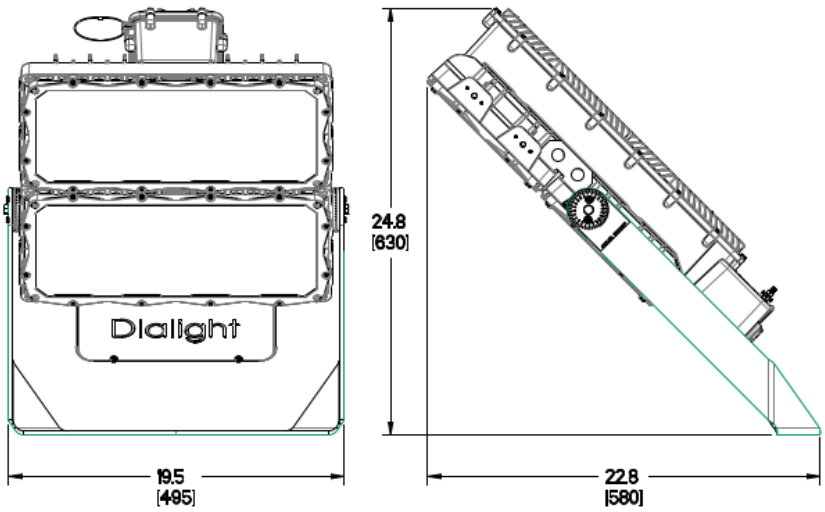

F2 STRAIGHT BRACKET

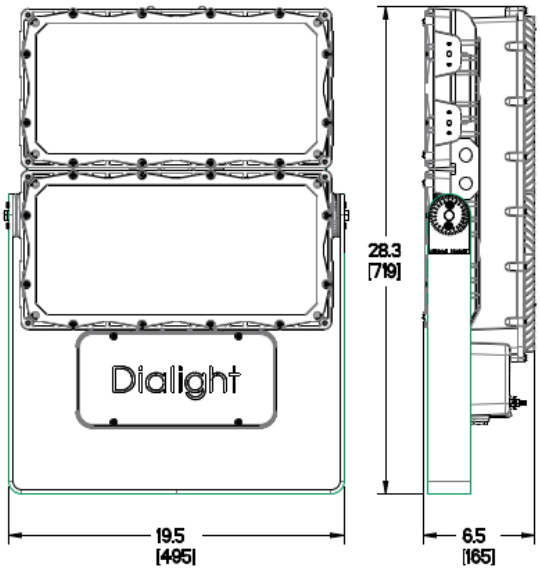

F2 BRACKET MOUNTING PATTERN

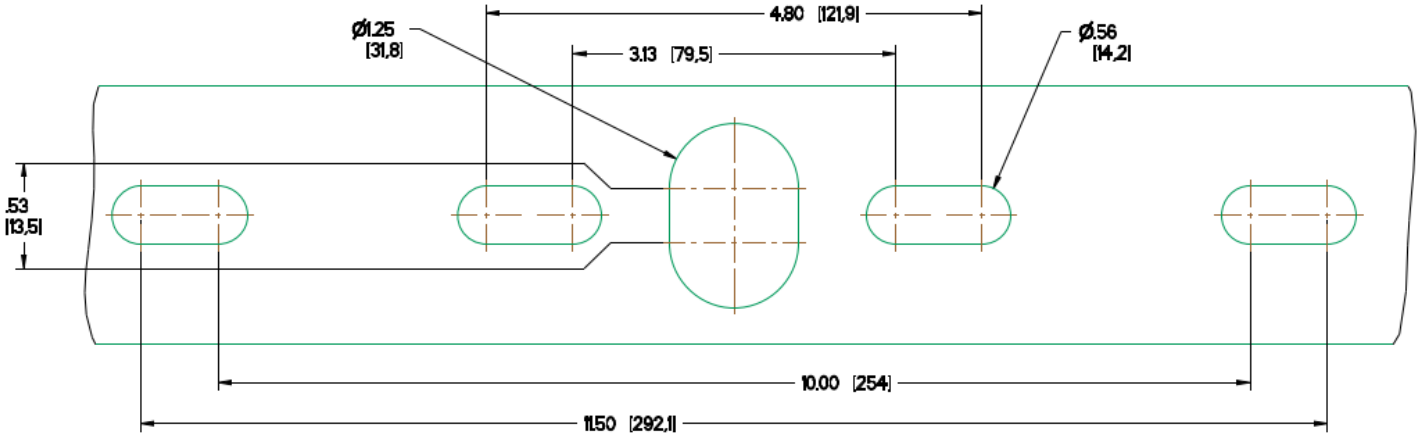

Disclaimer: The information above represents a general version of the luminaire and is subject to change based on particular variations.

Dialight, 1501 Route 34 South, Farmingdale, NJ, USA 07727
Tel: +1 732 919 3119 Fax: +1 732 751 5778 www.dialight.com

Official Statement

All statements, technical information, and recommendations contained herein are based on information and tests that Dialight believes to be reliable. The accuracy or completeness thereof is not guaranteed. In accordance with Dialight "Terms and Conditions of Sale" and since conditions of use are outside our control, the purchaser should determine the suitability of the product for his or her intended use and assumes all risk and liability whatsoever in connection therewith.

Declaración Oficial

Todas las declaraciones, información técnica y recomendaciones aquí contenidas se basan en información y pruebas que Dialight considera confiables. No se garantiza la exactitud ni la exhaustividad de las mismas. Conforme a los "Términos y Condiciones de Venta" de Dialight, y ya que las condiciones de uso están fuera de nuestro control, el comprador debera determinar la idoneidad del producto para el uso que prevé darle y asume todos los riesgos y responsabilidades de cualquier tipo en relación con ello.

Offizielle Erklärung

Alle hierin enthaltenen Angaben, technischen Daten und Empfehlungen basieren dem Wissen von Dialight nach auf zuverlässigen Informationen und Tests. Deren Richtigkeit oder Vollständigkeit wird daher nicht garantiert. Gemäß den „Verkaufsbedingungen und -konditionen" von Dialight und da die Nutzungsbedingungen sich unserer Kontrolle entziehen, muss der Käufer die Eignung des Produkts für seinen beabsichtigten Nutzungszweck bestimmen und alle mit im Zusammenhang stehenden Risiken und Haftungen übernehmen.

Déclaration officielle

Tous les chiffres, les données techniques et les recommandations contenus dans la présente sont basés sur des données et des tests que Dialight considère comme fiables. L'exactitude et l'exhaustivité de ces derniers ne sont donc pas garanties. En vertu des « Conditions générales de vente » de Dialight et étant donné que les conditions d'utilisation de nos produits échappent à tout contrôle de notre part, l'acheteur devra lui-même décider si le produit est conforme à son usage prévu et engagera sa propre responsabilité quant aux risques associés aux produits.

Declaração oficial

Todas as declarações, informações técnicas e recomendações contidas aqui baseiam-se em informações e testes que a Dialight acredita serem confiáveis. A precisão ou atendimento destes, porém, não é garantida. De acordo com os "Termos e Condições de Venda" da Dialight, e uma vez que tais condições estão fora de nosso controle, o comprador deve determinar a adequabilidade do produto para seu uso pretendido e assumir todos os riscos e responsabilidades associados a isso.

Dialight, 1501 Route 34 South, Farmingdale, NJ, USA 07727
Tel: +1 732 919 3119 Fax: +1 732 751 5778 www.dialight.com