BALDOR
A MEMBER OF THE ABB GROUP

BALDOR • RELIANCE

Product Information Packet

CTM3774T

10 AIR OVERHP,1760RPM,3PH,60HZ,215T,0733

Copyright © All product information within this document is subject to Baldor Electric Company copyright © protection, unless otherwise noted.

Part Detail

Revision:	H	**Status:**	PRD/A	**Change #:**		**Proprietary:**	No
Type:	AC	**Elec. Spec:**	07WGX761	**CD Diagram:**	CD0005	**Mfg Plant:**	
Mech. Spec:	07N391	**Layout:**	07LYN391	**Poles:**	04	**Created Date:**	08-14-2015
Base:	RG	**Eff. Date:**	03-15-2017	**Leads:**	9#14		

Specs

Catalog Number:	CTM3774T	**Heater Indicator:**	No Heater
Enclosure:	TEAO	**Insulation Class:**	F
Frame:	215T	**Inverter Code:**	Not Inverter
Frame Material:	Iron	**KVA Code:**	H
Output @ Frequency:	10.000 HP @ 60 HZ	**Lifting Lugs:**	Vertical Lifting Lugs
Synchronous Speed @ Frequency:	1800 RPM @ 60 HZ	**Locked Bearing Indicator:**	Locked Bearing
Voltage @ Frequency:	208.0 V @ 60 HZ	**Motor Lead Quantity/Wire Size:**	9 @ 14 AWG
	460.0 V @ 60 HZ	**Motor Lead Exit:**	Ko Box
	230.0 V @ 60 HZ	**Motor Lead Termination:**	Flying Leads
XP Class and Group:	None	**Motor Type:**	0736M
XP Division:	Not Applicable	**Mounting Arrangement:**	F1
Agency Approvals:	CSA	**Power Factor:**	80
	CSA EEV	**Product Family:**	Chemical Processing (Not DC)
	UR	**Pulley End Bearing Type:**	Sealed Bearing
Auxillary Box:	No Auxillary Box	**Pulley Face Code:**	Standard
Auxillary Box Lead Termination:	None	**Pulley Shaft Indicator:**	Tapped & Key
Base Indicator:	Rigid	**Rodent Screen:**	None
Bearing Grease Type:	Polyrex EM (-20F +300F)	**Shaft Extension Location:**	Pulley End

BALDOR A MEMBER OF THE ABB GROUP

Blower:	None	**Shaft Ground Indicator:**	No Shaft Grounding
Current @ Voltage:	27.500 A @ 208.0 V	**Shaft Rotation:**	Reversible
	26.000 A @ 230.0 V	**Shaft Slinger Indicator:**	Shaft Slinger
	13.000 A @ 460.0 V	**Speed Code:**	Single Speed
Design Code:	B	**Motor Standards:**	NEMA
Drip Cover:	No Drip Cover	**Starting Method:**	Direct on line
Duty Rating:	CONT	**Thermal Device - Bearing:**	None
Electrically Isolated Bearing:	Not Electrically Isolated	**Thermal Device - Winding:**	None
Feedback Device:	NO FEEDBACK	**Vibration Sensor Indicator:**	No Vibration Sensor
Front Face Code:	Standard	**Winding Thermal 1:**	None
Front Shaft Indicator:	None	**Winding Thermal 2:**	None

Nameplate NP1260E

CAT.NO.	CTM3774T						
SPEC.	07N391X761G1						
HP	10 AIR OVER						
VOLTS	208-230/460						
AMP	27.5-26/13						
RPM	1760						
FRAME	215T	HZ	60			PH	3
SER.F.	1.15	CODE	H	DES	B	CL	F
NEMA-NOM-EFF	89.5	PF	80				
RATING	40C AMB-CONT						
CC						USABLE AT 208V	
DE	6307	ODE	6206				
ENCL	TEAO	SN					
	1700 FPM 170 CFM						

BALDOR
A MEMBER OF THE ABB GROUP

AC Induction Motor Performance Data

Record # 50354 - Typical performance - not guaranteed values

Winding: 07WGX761-R022	**Type:** 0736M	**Enclosure:** TEAO

Nameplate Data				460 V, 60 Hz: High Voltage Connection	
Rated Output (HP)	10 AIR OVER			Full Load Torque	29.79 LB-FT
Volts	208-230/460			Start Configuration	direct on line
Full Load Amps	27.5-26/13			Breakdown Torque	120 LB-FT
R.P.M.	1760			Pull-up Torque	46.79 LB-FT
Hz	60	Phase	3	Locked-rotor Torque	65.51 LB-FT
NEMA Design Code	B	KVA Code	H	Starting Current	88.79 A
Service Factor (S.F.)	1.15			No-load Current	6.07 A
NEMA Nom. Eff.	89.5	Power Factor	80	Line-line Res. @ 25ºC	1.22 Ω
Rating - Duty	40C AMB-CONT			Temp. Rise @ Rated Load	73°C
S.F. Amps				Temp. Rise @ S.F. Load	87°C
				Locked-rotor Power Factor	38.8
				Rotor inertia	0.885 LB-FT2

Load Characteristics 460 V, 60 Hz, 10 HP

% of Rated Load	25	50	75	100	125	150	S.F.
Power Factor	42	64	75	81	83	84	81
Efficiency	84.1	89	89.9	89.5	88.5	86.6	89
Speed	1789	1779	1770	1760	1748	1734	1752
Line amperes	6.67	8.24	10.41	12.84	15.88	19.17	14.9

BALDOR A MEMBER OF THE ABB GROUP

Performance Graph at 460V, 60Hz, 10.0HP Typical performance - Not guaranteed values

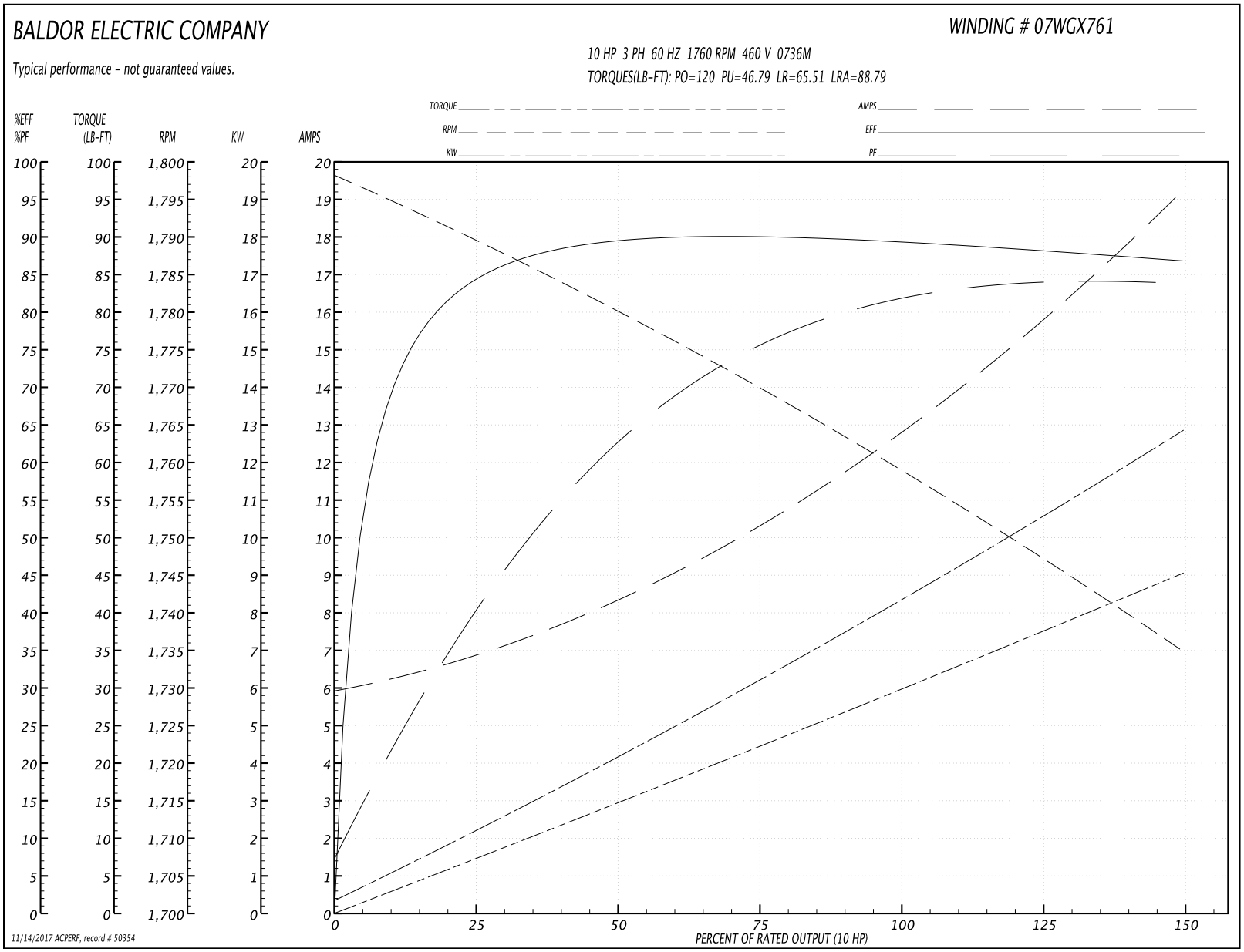

BALDOR A MEMBER OF THE ABB GROUP

07LYN391

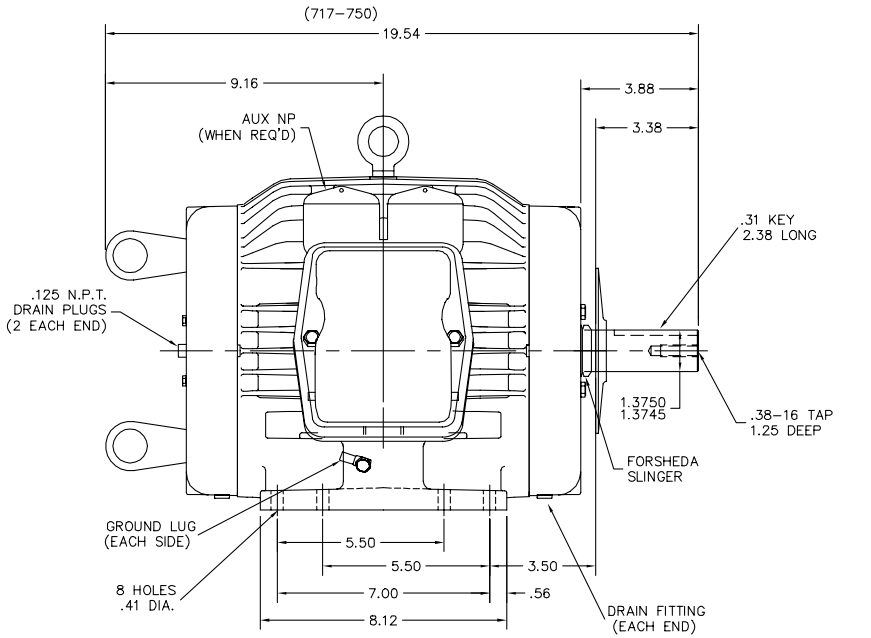

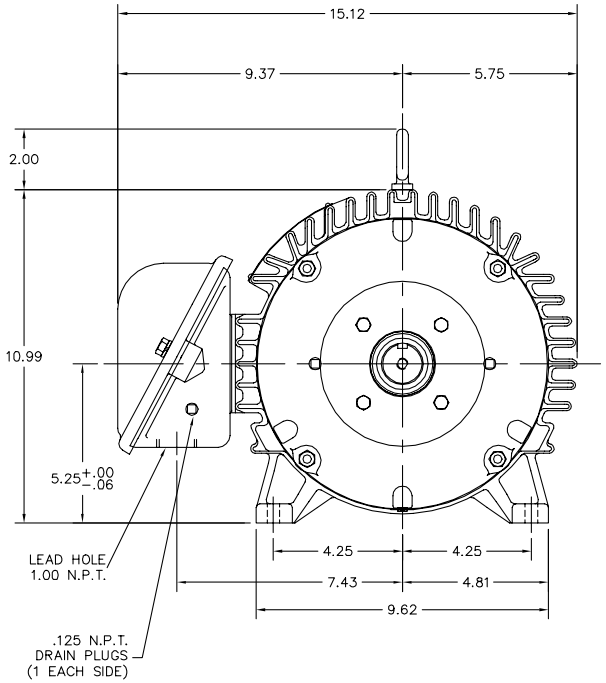

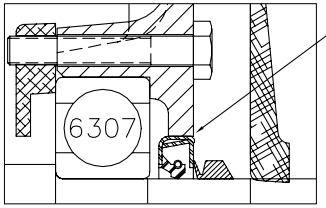

PULLEY END DETAIL

NOTE:
FOR VERTICAL SHAFT UP LIFTING,
REMOVE EYE BOLT FROM TOP OF MOTOR
AND SCREW INTO END OF SHAFT

CUSTOMER IS RESPONSIBLE FOR DETERMINING THAT BALDOR'S PRODUCT WILL PERFORM SUITABLY IN THE INTENDED APPLICATION.

REV. DESC: REPLACE 07SH2887 W/07SH2955			BALDOR
REV. LTR: A	VERSION: 01	TDR: 000000964179	
FILE: \AAA\00220\883	REVISED: 08:26:01 02/02/2016	BY: ENALEMO	HOR 213–5T TEAO CP COOL TOWER, LIFT, SLD BRGS, SEAL, DOME SL
MTL: –			SH 1 of 1

07LYN391

BALDOR
A MEMBER OF THE ABB GROUP

CD0005

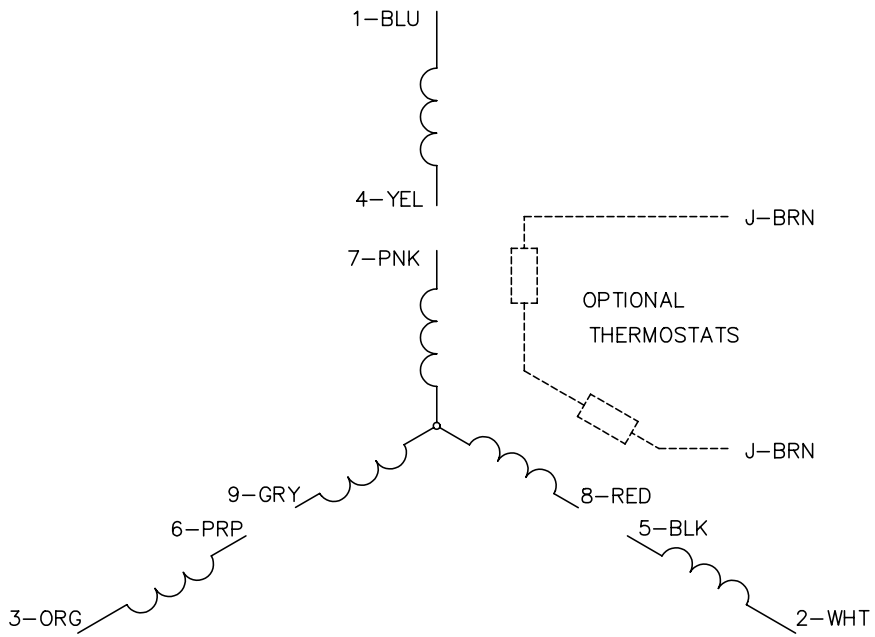

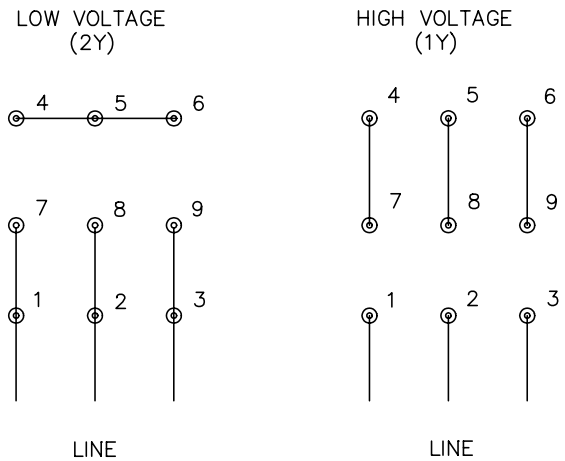

NOTES:

1. INTERCHANGE ANY TWO LINE LEADS TO REVERSE ROTATION.
2. OPTIONAL THERMOSTATS ARE PROVIDED WHEN SPECIFIED.
3. ACTUAL NUMBER OF INTERNAL PARALLEL CIRCUITS MAY BE A MULTIPLE OF THOSE SHOWN ABOVE.
4. LEAD COLORS ARE OPTIONAL. LEADS MUST ALWAYS BE NUMBERED AS SHOWN.

REV. DESC: REVISE TO SHOW OPTIONAL COLORS			
REV. LTR: E	BY: JLP	REVISED: 01/19/99 10:15	TDR: 0171435
CD0005		FILE: AAA00005140	MDL: –
		MTL: –	

BALDOR ELECTRIC Co.

3PH, DV, 9 LEADS

CD0005

BALDOR
A MEMBER OF THE ABB GROUP